BAE HAWK T.1A

DCS:HAWK

FLIGHT MANUAL

Copyright © VEAO Ltd 2012

Contents

ELECTRICAL SYSTEMS **5**
OVERVIEW 5
GENERAL 5
DC SYSTEM 7
Generator Failure Warning *7*
Voltage Control and Protection 7
Undervoltage and Time Delay Unit 7
Battery Supplies *7*
General 7
Standby Function 7
Alternative Supplies 8
Voltmeter *8*
Inertia Switches *8*
External Supply *9*
AC SYSTEM 9
AC Supplies *9*
Inverter Control *9*
Inverter Failure Warning *10*
NORMAL USE 10
Before Flight *10*
Before Engine Starting on Internal Batteries 10
After Engine Starting on Internal Batteries 10
Before Engine Starting on External DC Supply 10
After Engine Starting on External DC Supply 10
In Flight *11*
After Flight *11*
MALFUNCTIONING 11
DC Generator Failure *11*
a. Standing Loads 12
b. Selectable Loads 13
c. Short Duration Selectable Loads 13
Undervoltage and Time Delay Unit Failure *14*
Battery Failure *14*
AC Failure *14*
Single Inverter Failure 14
No 1 and No 2 Inverter Failure 14

DRAFT

DISCLAIMER:

This flight manual is for the sole purpose of flying the BAE Systems Hawk Mk T.1A in the DCS World Flight Simulator.

The content of this manual should not be relied upon in any way to fly real aircraft and VEAO Ltd take no responsibility for actions arising from using the content in the real world.

INTENTIONALLY BLANK

Electrical Systems

DC Generation	One engine-driven 9kw generator
Supply	28 volts
Batteries (two)	24 volts
AC Supply	115 volts 400hz single-phase

Overview

An engine-driven 9kw DC generator supplies an Essential Services busbar via a Generator busbar. Two batteries provide power for engine starting and, following generator failure, for those services essential for the normal operation of the aircraft; the batteries are individually switched to the Essential Services busbar.

Two static inverters, supplied from the Generator busbar, provide the main AC power requirements; in addition, some equipments are supplied from individual static invertors. The T.1A has an additional static inverter to provide power for the armament installation.

An external DC power supply can be connected for aircraft servicing purposes and to supply power for operational readiness states and for engine starting.

General

Primary DC power is provided by an engine-driven 9kw DC generator which supplies 28 volts to a Generator busbar. AC power is provided by two static inverters which are connected in parallel to an AC busbar. The inverters are powered from the Generator busbar and each supplies 115 volts 400Hz to the AC busbar. A third 115 volts 400Hz static inverter powered from the Generator busbar is connected to an Armament AC busbar. Warnings of generator and inverter failure are given on the central warning panel (CWP).

Two 24 volt batteries provide power for an engine starting system and, following generator failure, for services which are essential for the normal operation of the aircraft. The batteries are connected to individual Battery busbars each of which is connected by a switch to an Essential Services busbar. A diode protected supply from each Battery busbar supplies certain services from a common outlet.

An external DC supply can be connected and used for servicing purposes. The external DC supply can also be used for engine starting and for charging the batteries.

A simplified diagram of the electrical system is below at Fig. 1

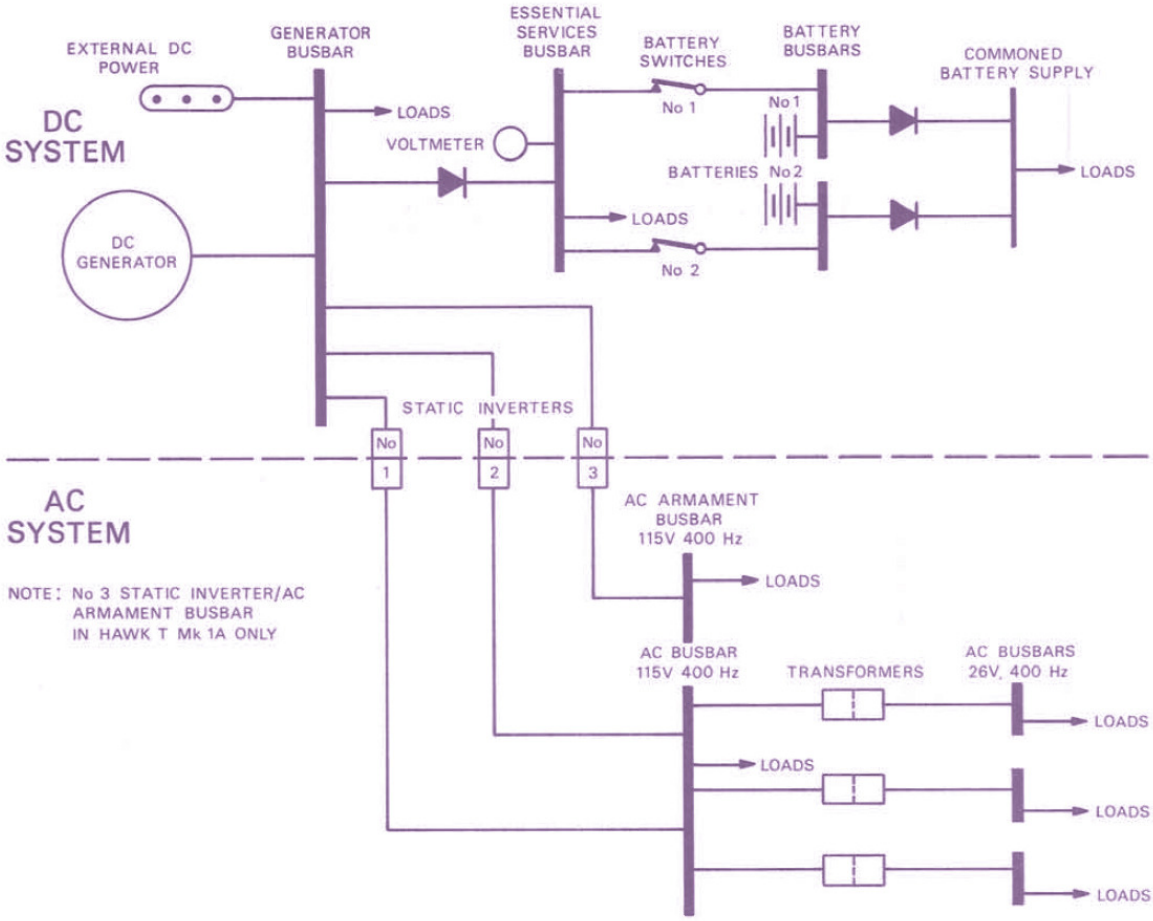

1—1 Fig 1 Electrical Systems—Simplified Schematic

(to be updated to higher quality graphic)

DC System

The 9Kw 28 volt DC generator is below the forward end of the engine, and is driven by the engine external gearbox. Generator output is supplied to the Generator busbar which is connected, via diodes, to the Essential Services busbar.

Generator Failure Warning

Voltage Control and Protection

The output of the generator is controlled by a voltage regulator and an overvoltage unit. An output relay within the regulator operates in conjunction with protector circuits in the overvoltage unit, to take the generator offline if the voltage exceeds 30+/-0.5 volts and to illuminate the GEN caption on the CWP. Provided the overvoltage condition clears, the relay can be reset and the generator brought back on line by pressing the DC RESET button. During engine relighting the relay is energised when the engine start/relight button is pressed; the generator is taken off line. The generator must be reset after a successful relight.

Undervoltage and Time Delay Unit

An undervoltage and time delay unit is connected, via a fuse, to the Essential Services busbar. When an undervoltage condition (25 volts or less) is sensed an integral failure relay is de-energised and the GEN caption is illuminated on the CWP. The relay is time delayed (1.5 seconds) to prevent operation of the undervoltage unit by a transient undervoltage condition.

Battery Supplies

General

The two 24 volts 18 ampere/hour lead acid batteries, No 1 and No 2, are in the main equipment bay. The batteries are controlled from the front cockpit by the 2-position switches, BATT 1 and BATT 2. Setting a battery switch on (forward) energises an associated battery contactor to connect its Battery busbar to the Essential Services busbar. In this condition the battery is charged by the generator; if the generator is off line however, the battery provides a power supply to the Essential Services busbar. A commoned supply also provides, in conjunction with the STBY INST and UHF-NORMAL/BATT switches, an alternative supply to standby flight instruments, main UHF transceiver and the communications control systems (CCS).

Standby Function

If the generator fails the services supplied by the Generator busbar are lost; however, those services connected to the Essential Services busbar continue to operate from the Battery busbar's supply provided the battery switches are on. Fully charged batteries should support Essential Services busbar for approximately 25 minutes; battery power may be conserved by selective load shedding.

Emergency and Standby Services

Irrespective of the setting of the battery switches the following emergency and standby services are powered from the commoned battery supply:

a. Landing gear standby lowering.
b. Flap standby lowering.
c. Cockpit emergency lighting
d. Fire extinguisher.
e. Crash relay operation.

Alternative Supplies

a. When the UHF-NORMAL/BATT switch is at NORMAL, the CCS and the main UHF transceiver are powered from the Essential Services busbar; when the switch is at BATT, they are powered from the common battery supply.
b. When the STBY INST-NORMAL/BATT switch is at NORMAL, the following instruments in the associated cockpit are powered from the Essential Services busbar; when the switch is at BATT they are powered from the commoned battery supply:
    (1) Turn-and-slip indicator.
    (2) Standby attitude indicator.
    (3) Directional gyro indicator.

Voltmeter

The DC voltmeter is connected via a fuse, to the Essential Services busbar. The scale of the voltmeter ranges from 21 to 29 volts and is graduated in 2-volt increments. Concentric with the graduated scale is a coloured scale which extends from 21 to 24 volts (orange) and from 24 to 29 volts (green). When the generator is off line (with the external DC supply switched off) and the battery switches are on, battery voltage is indicated; the voltage of each battery can be checked by selecting the switches off/on in turn. With the generator off line, the external DC switched on and the battery switches on, the Essential Services busbar voltage is indicated; it is not possible to determine whether external DC supply voltage or battery voltage is indicated. The voltmeter indicates generator voltage when the generator is on line.

Inertia Switches

Two inertia switches, one in each mainwheel bay, are connected in series. When a longitudinal deceleration of 3 g or more is experienced, both switches close automatically. Via the closed switches, a commoned battery supply energizes a crash relay. The relay de-energizes the No 1 and No 2 battery contactors, which open to disconnect the battery busbars from the Essential Services busbar. Simultaneously, the crash relay connects the commoned battery supply via the overvoltage unit to the voltage regulator output relay which takes the generator off line. The energized crash relay also connects the commoned battery supply to operate the engine bay fire extinguisher.

External Supply

An external 28 volt DC supply socket is under an access panel on the right side of the fuselage aft of the engine air intake. With the battery switches and both engine start master switches off, switching on an external power supply energizes an external power supply contactor via the battery contactors and the undervoltage unit; 28 volts DC is then supplied, via the contactor and the Generator busbar, to the Essential Services busbar. When the external supply is connected and switched on the central warning system (CWS) is muted.

If either of the battery switches or both of the engine start master switches are set to on, the external power supply remains connected to the Generator and the Essential Services busbars; this enables the engine starting system to be powered from the external DC supply. The batteries are charged from the external DC supply before the engine is started while the battery switches are on.

AC System

AC Supplies

AC power is provided by two static inverters, No 1 and No 2, which are supplied with DC from the Generator busbar. The output of the inverters, 115 volts, 400 hz, single-phase, is supplied to the AC busbar. Each inverter has voltage and frequency regulation and protection circuits, The inverters are interconnected for phase control, and the first inverter to sense a satisfactory DC input assumes a master control function over both inverters. With a satisfactory DC input, and provided their output is within specified limits, the inverters are brought online automatically.
The DC input can be provided by the generator or from an external power source. Three step-down transformers are connected to the AC busbar; they provide 26 volt 400 hz, single-phase supplies to associated busbars. A third 115 volts, 400 hz single-phase static inverter, No 3, is supplied with DC from the Generator busbar; it's output is connected to an Armament AC busbar.
No 3 inverter has voltage and frequency regulation and protection circuits which are similar to those of No 1 and No 2 inverters; it is brought on line automatically provided its output is within specified limits.

Inverter Control

The inverter protection circuits trip an inverter off line when certain fault conditions are detected. The fault conditions are grouped in two types, those associated with the input to an inverter and those associated with the output of an inverter. When an input fault condition has been cleared the inverter is automatically reset but after an output fault is cleared the inverter must be reset manually. Manual resetting of each inverter is controlled by the AC 1 RESET and AC 2 RESET and AC 3 RESET button respectively.

Inverter Failure Warning

Warning that an inverter has failed or is off line is indicated by illumination of an AC 1, AC 2 or AC 3 caption.

Normal Use

Before Flight

Before Engine Starting on Internal Batteries

a. Check that external DC power supply is disconnected.
b. Set both battery switches to on. Check that the GEN, AC 1, AC 2 and AC 3 captions are illuminated and that the voltmeter reads a minimum of 23 volts. Check the voltage of the batteries by selecting the BATT 1 and BATT 2 switches off and on in turn; the voltmeter should read a minimum of 23 volts for each battery.

After Engine Starting on Internal Batteries

a. Check that the GEN, AC 1, AC 2 and AC 3 captions are out. If the GEN caption remains illuminated, press the DC RESET button and check that the caption goes out. If an AC caption remains illuminated, press the appropriate AC RESET button and check that the caption goes out.
b. Check that the voltmeter indicates between 27 and 29 volts.

Before Engine Starting on External DC Supply

a. Check that the external DC power is disconnected.
b. Set both battery switches to on. Check that the GEN, AC 1, AC 2 and AC 3 captions are illuminated and hat the voltmeter reads a minimum of 23 volts. Check the voltage of the batteries by selecting BATT 1 and BATT 2 switches off and on in turn; the voltmeter should read a minimum of 23 volts for each battery.
c. Set both battery switches off.
d. Have the external DC supply connected. Check that the voltmeter reads a minimum of 25 volts and that the GEN, AC 1, AC 2 and AC 3 captions are not illuminated.

After Engine Starting on External DC Supply

a. Set both battery switches on.
b. Have the external DC supply disconnected.
c. Check that the GEN, AC 1, AC 2 and AC 3 captions are out. If the GEN caption remains illuminated, press the DC RESET button and check that the caption goes out. If an AC caption remains illuminated, press the appropriate AC RESET button and check that the caption goes out.
d. Check that the voltmeter indicates between 27 and 29 volts.

In Flight

In flight the GEN, AC 1, AC 2 and AC 3 captions should remain out and the voltmeter should indicate between 27 and 29 volts.
In flight, if either engine start/relight button is pressed the generator is automatically taken off line and the GEN, AC 1, AC 2 and AC 3 captions are illuminated. Following engine relight, press the DC RESET button and check that the GEN caption goes out. When the generator output voltage is sufficient to sustain the inverters on line the AC captions should go out.

After Flight

During the **Shutdown Checks**, switch off all electrical services and then switch off the batteries.

Malfunctioning

DC Generator Failure

Generator failure is indicated by the GEN caption being illuminated and by the voltmeter indicating 25 volts or less. As the generator busbar voltage falls the inverters are tripped off line and the AC 1, AC 2 and AC 3 captions are illuminated. Press the DC RESET button to bring the generator back on line; if the fault was transient the GEN caption should go out. Automatic resetting of the inverters should extinguish the AC 1, AC 2 and AC 3 captions but if necessary the inverters may be rest manually. If the generator cannot be reset, switch off all non essential services and land as soon as possible.

Note: if the FPR caption remains illuminated following the resetting of the DC generator, switch the FUEL PUMP switch off and then on to extinguish the caption.

If the generator cannot be rest:

a. The services connected to the Generator busbar are lost, ie:
   - AHRS
   - Fuel booster pump
   - Main altimeter
   - Main attitude indicator
   - Horizontal Situation Indicator
   - ILS localiser/glideslope receiver
   - ISIS control unit
   - Navigation mode selector

b. The services connected to the Essential busbar are supplied from the batteries provided the battery switches are on.

Following the loss of the generator, voltage decreases immediately to that of the batteries, ie. approximately 24 volts. Set the STBY INST switch and the UHF switch to BATT. The voltage subsequently decreases to approximately 21 volts (the rate of decrease being dependent on the demand on the batteries) and then falls rapidly. When the battery voltage falls to 21 volts, switch on the cockpit emergency lighting if required. The battery switched should be then set to off; the voltmeter needle then

deflects fully to the left and subsequently no attempt should be made to determine battery voltage form the voltmeter.

After generator failure, the life of the batteries may be prolonged (beyond the nominal 25 minutes) by shedding selectable loads on the Essential Services busbar, as listed in sub-para b and c below. Listed in sub-para a are the standing loads on the busbar. the loads listed below are given in amperes, based on a 24 volt supply; only loads of one ampere or above are given.
If it should be necessary to isolate the Essential Services busbar, switch off both battery switches; all of the listed services will then be lost.

a. Standing Loads

Accident data recorder	1.0
Airbrake indicator	-
Cabin pressurization - Off, NORMAL, DEMIST or FLOOD selected (control valve solenoid energized)	1.0
Central warning captions	-
Engine bleed valve control	1.0
Engine control amplifier - T6/NL control	1.0
Trim indicators -	
Aileron and rudder	-
Tailplane position indicator	-
Fatigue meter	-
Fire-wire control unit	1.0
Flap indicator	-
Fuel contents gauge	-
Landing gear indication	-
Landing gear external indicator light (when landing gear locked down)	-
Cabin temperature control	-
Oxygen flow indicator	-
EHMS	2.4

b. Selectable Loads

Pitot tube heater	13.8
Landing/taxy lamp	7.6
Anti-collision light	6.9
Single anti-collision light	4.3
Cockpit lighting (normal)	2.7
Navigation lights	2.1
Main UHF transmit	3.1
Standby UHF transmit	1.2
VHF transmit	2.6
Cabin pressurization - Off, NORMAL, DEMIST or FLOOD selected	2.5
IFF: Maximum	2.2
Receive	0.6
Anti-skid control (landing gear down)	1.0
Landing gear control (normal)	-
Weapon control - MASS at UNLOCK LIVE (and No 1 battery busbar)	-
VOR receiver	1.0

c. Short Duration Selectable Loads

Seat pan height adjustment	12.8
Airbrake control - out	-
Flap control (normal)	-
Trim control aileron	-
rudder	-
tailplane (main or stndby)	1.3
AC reset	-
DC reset	-
Engine - start/relight button pressed	7.6
Start master switch - START selected	13.8
Ram air turbine (RAT) reset	-
ILS marker light test	-
Weapon control	-
Towed target release	-

After the UHF and STBY INST switches have been set to BATT, the following loads are transferred to the No 1 and No 2 Battery commoned supply:

Standby attitude indicator	start	4.1
	run	1.7
UHF transmit		3.1
receive		0.9
Communications control system		0.3
Turn-and-slip indicator	start	2.6
	run	0.6
DGI	start	0.8
	run	0.6

Undervoltage and Time Delay Unit Failure

Failure of the fuse connecting the undervoltage and time delay unit to the Essential Services busbar causes the GEN caption to be illuminated. If the voltmeter indicates between 27 and 29 volts failure of the fuse is confirmed and the warning is spurious; the voltmeter must be monitored at frequent intervals. If the generator subsequently fails the AC 1, AC 2 and AC 3 captions are illuminated and the voltmeter indicates battery voltage (approximately 24 volts).

Battery Failure

An unserviceable battery may cause the generator to be tripped off line and prevent it from being reset. If this occurs, the unserviceable battery must be isolated. Set the battery switches off/on in turn; if the voltmeter registers an increase when either switch is at off, that switch should be left off. A single fully-charged battery should supply the Essential Services busbar loads for approximately 12 minutes. If necessary, after an unserviceable battery has been isolated, press the DC RESET button to bring the generator on line.

AC Failure

Failure of the No 1 or the No 2 or the No 3 static inverter is indicated by the AC 1, AC 2 or AC 3 caption, respectively, being illuminated. Failure of all three inverters may cause the failure of the DC generator; if after resetting the generator, the inverters do not reset automatically, press the AC RESET buttons to bring them on line.

Single Inverter Failure

If a single inverter is tripped off line the associated AC 1, AC 2 or AC 3 caption is illuminated. If the inverter fails to reset automatically, press the associated reset button. If the initial attempt to reset the inverter fails further attempts may be made during the remainder of the flight.
Note: The output of either the No 1 or No 2 inverter is sufficient to power all the loads on the AC busbar.

No 1 and No 2 Inverter Failure

a. If both the No 1 and No 2 inverters trip off line, other than following a generator malfunction, attempt to reset one inverter only using the following procedure; if the attempt fails, the procedure should not be repeated immediately but may be repeated at intervals during the remainder of the flight:

(1) Press the AC 1 RESET button
(2) If No 1 inverter resets, do not attempt to reset No 2 inverter.
(3) If No 1 inverter fails to reset, press the AC 2 RESET button.
(4) If No 2 inverter resets, do not make a further attempt to reset No 1 inverter.

b. If both inverters remain offline, the main attitude indicator, the horizontal situation indicator and the AHRS are unreliable. The standby flight instruments, ie, standby attitude indicator, turn-and-slip indicator and DGI continue to operate.

Electrical Systems

FRONT COCKPIT ONLY

FRONT COCKPIT ONLY

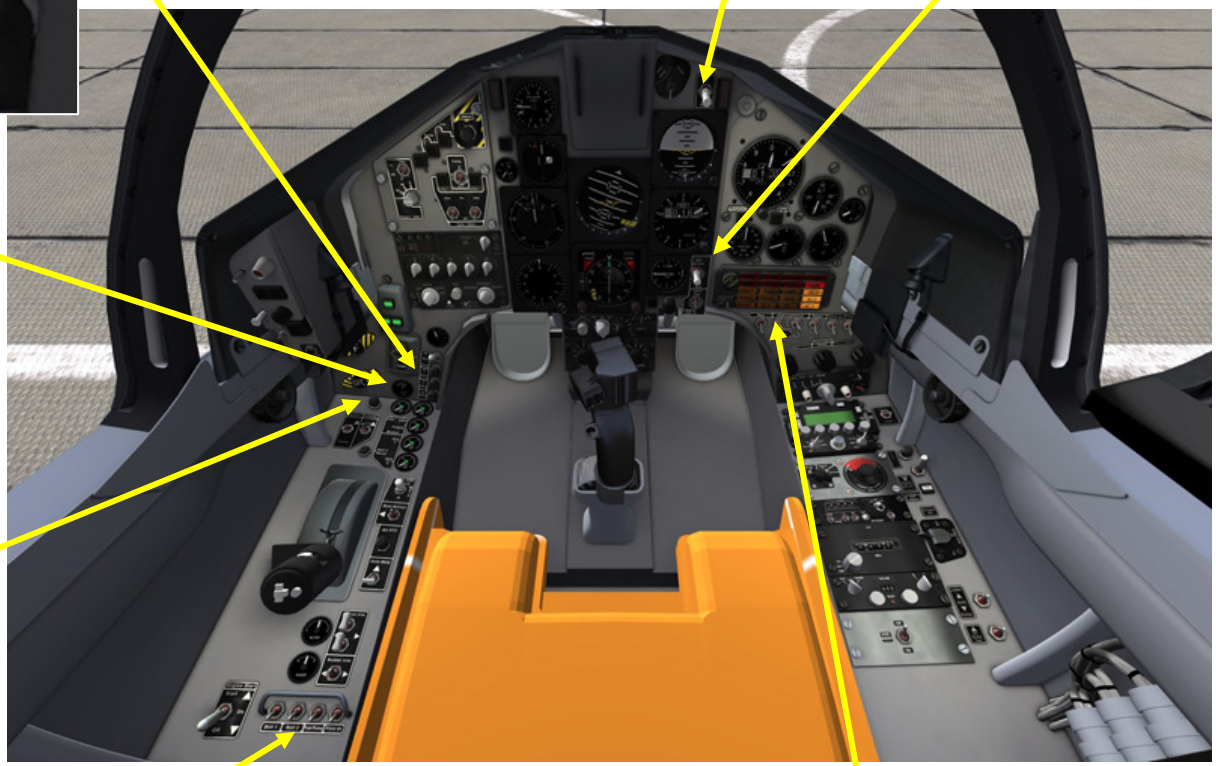

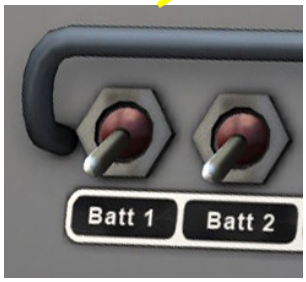

FRONT COCKPIT ONLY

Update main image and AC3 RESET once seat textured

Table 1 - Electrical Systems Controls and Indicators

Item	*Marking*	*Location*	*Function*
Front Cockpit Only			
Battery switches (two) (on, forward)	BATT1 BATT2	Left Console	Connect associated battery to Essential Services busbar
DC Voltmeter	BATT VOLTS	Lower left panel	Indicates voltage at Essential Services busbar
Inverter reset button	AC3 RESET	Left Console	Brings No. 3 inverter on line
Both Cockpits			
Generator reset button	DC RESET	Left Panel	Brings generator on line
Inverter reset buttons (two)	AC 1 RESET AC 2 RESET	Left Panel	Brings associated inverter on line
Generator warning caption	GEN	CWP	Indicates voltage at Essential Services busbar is 25 volts or less
Inverter off line caption	AC1 AC2	CWP	Indicate associated inverter is disconnected from AC busbar.
	AC3		Indicates No 3 inverter is disconnected from the Armament busbar